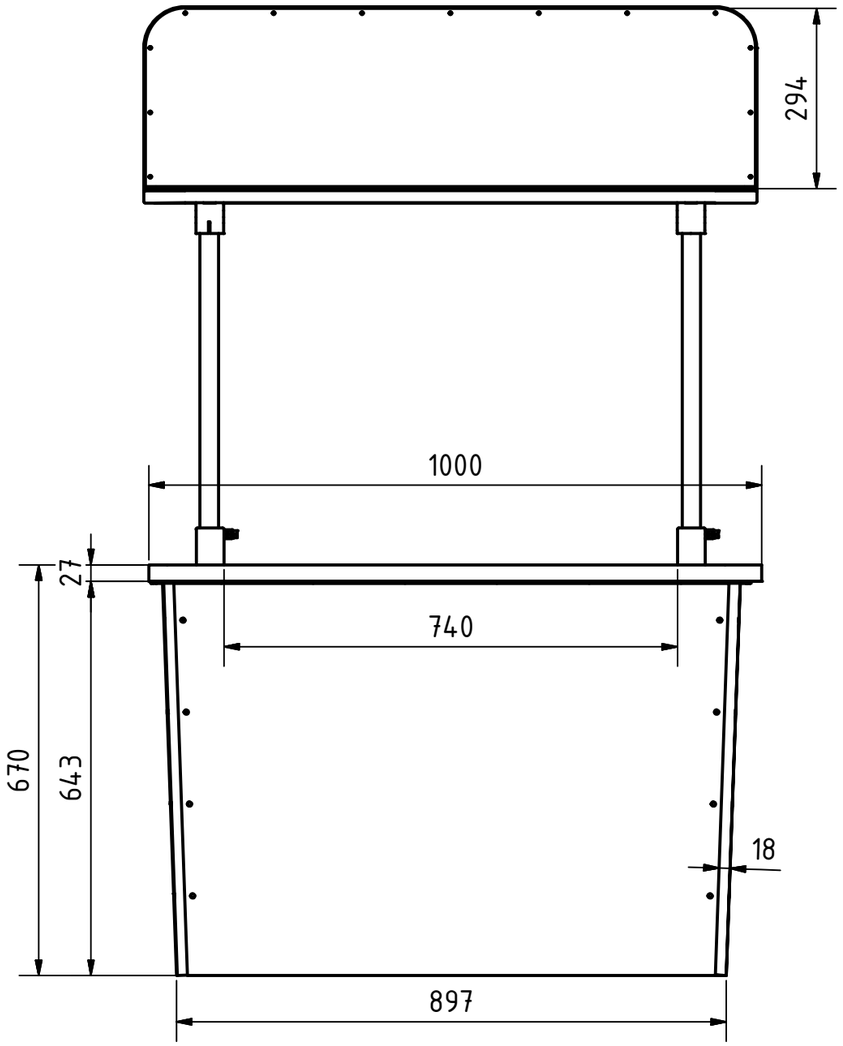

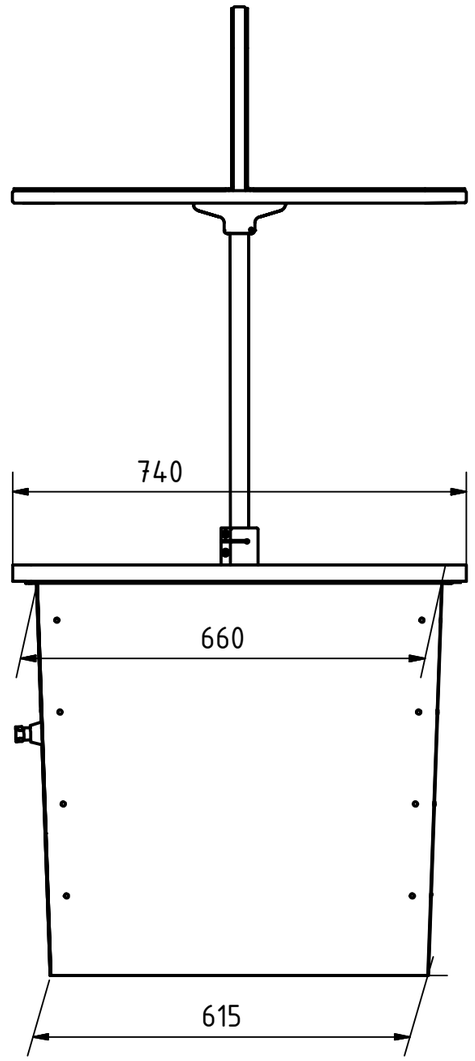

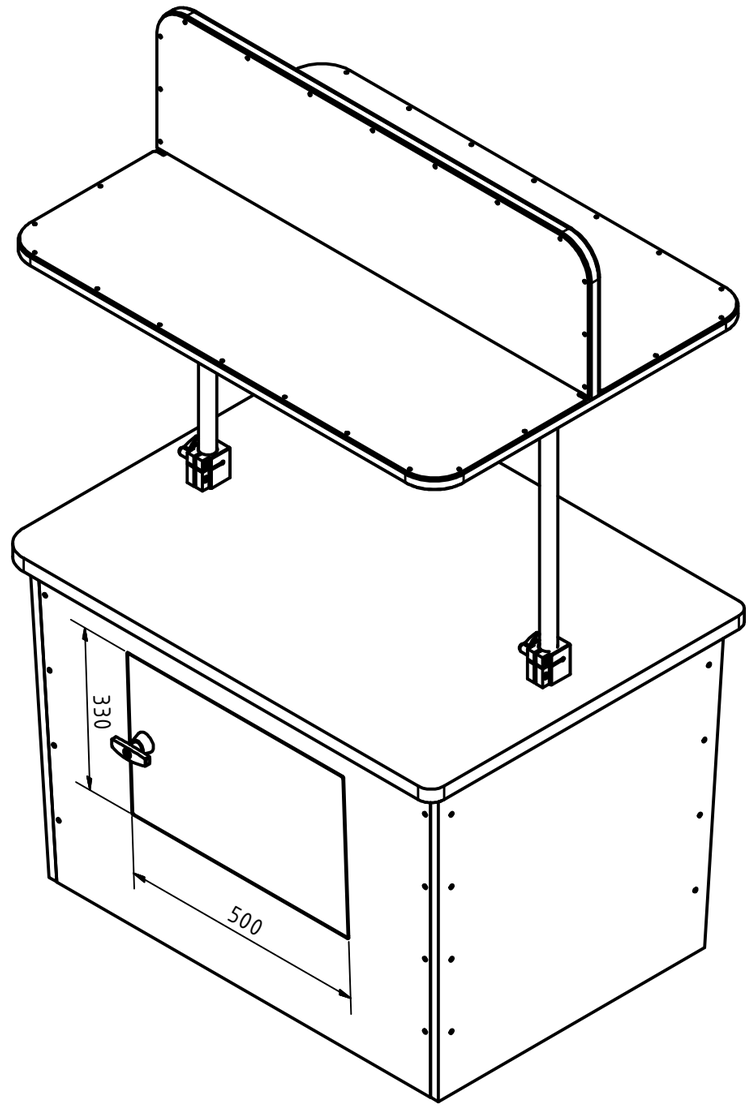

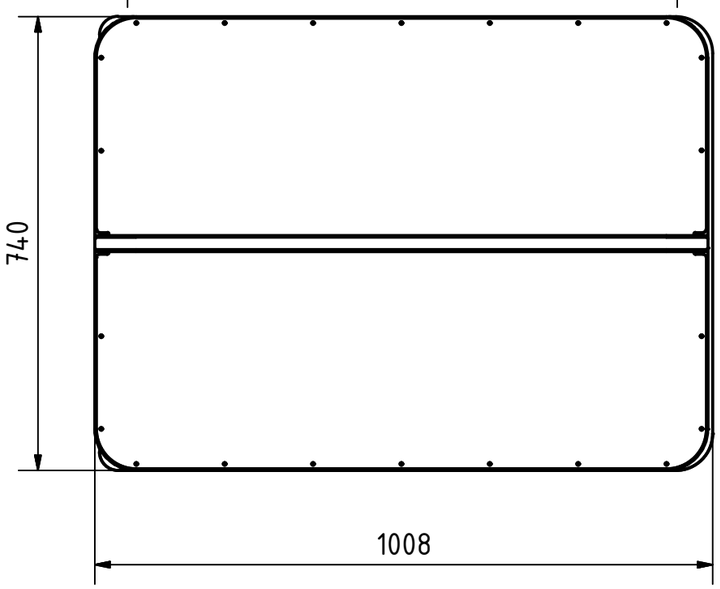

					Date	Name
				Drawn	12.04.2017	Asus
				Checked		
				Standard		
State	Changes	Date	Name			

Cutie TRICIBLAT 18

1

A3